MP-Cable ladders

Cable ladders MP-S, TS, Z, PZ, AZ
Figures point to page no.

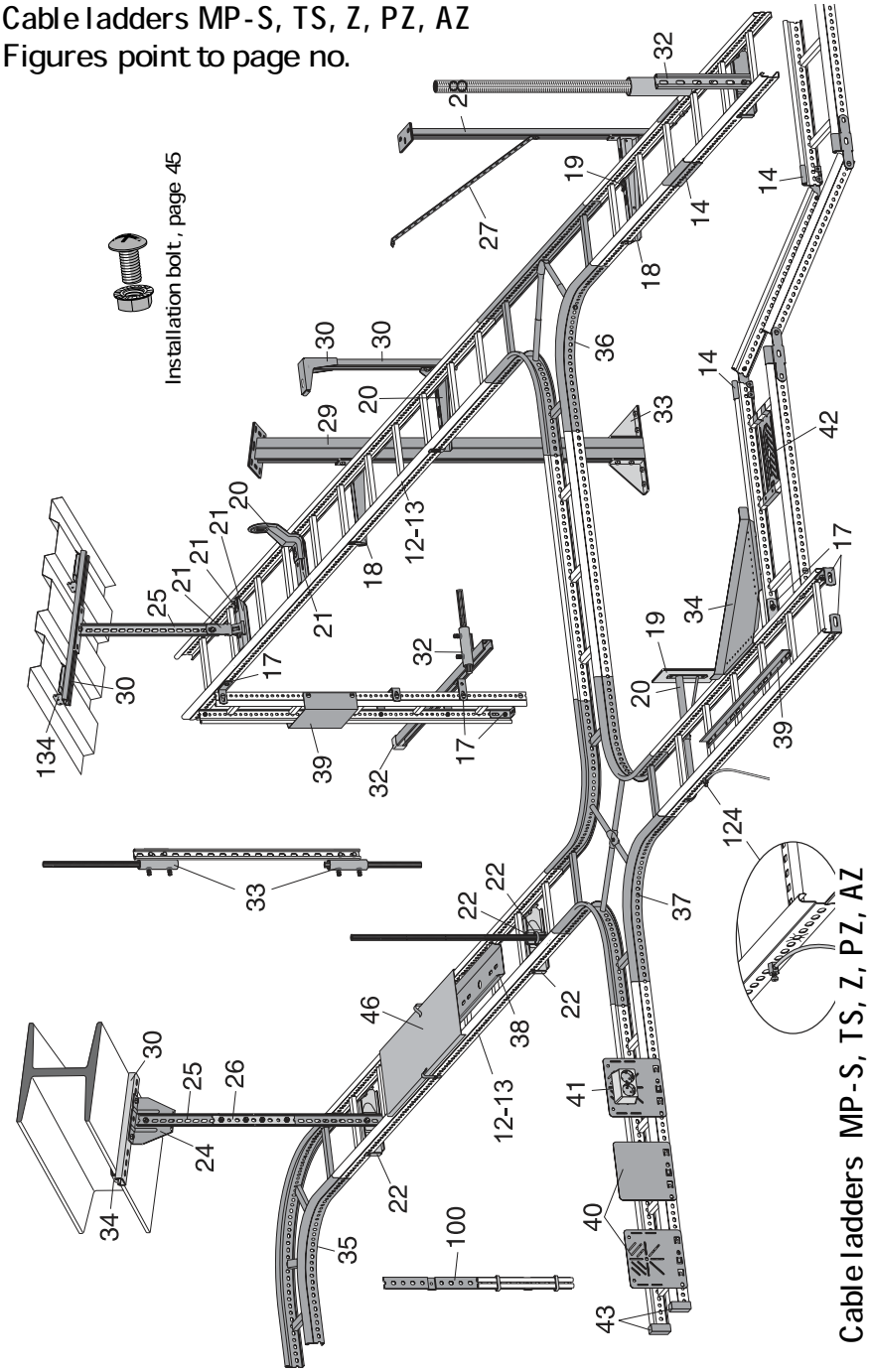

Cable ladders MP-FZ
Figures point to page no.

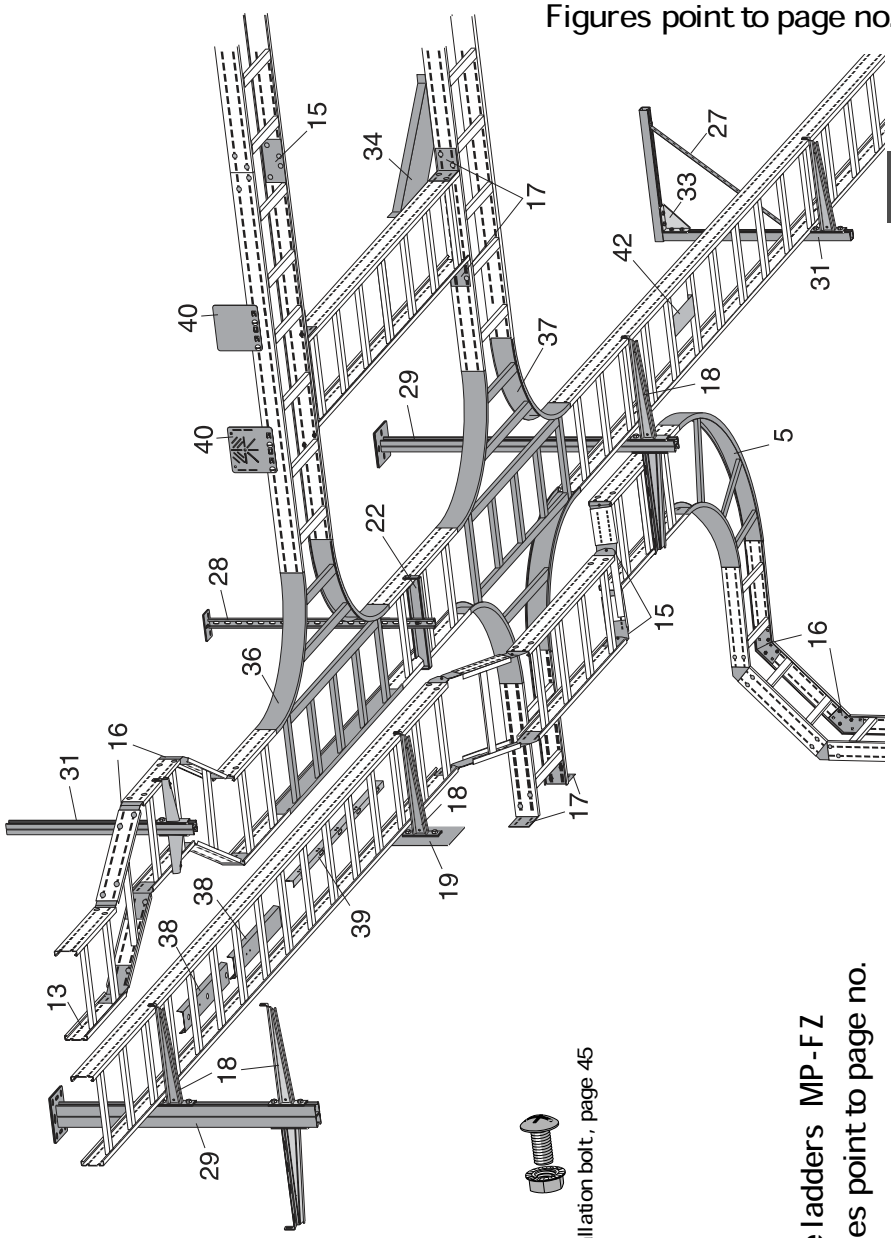

Installation bolt, page 45

Cable ladders MP-FZ
Figures point to page no.

MP-Cable ladders

Cable ladder type MP-S

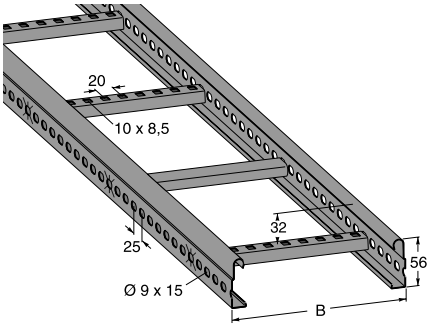

Fulfils the requirements of EL AMA for heavy cable ladders. For choice of surface treatment, see page 4. Can be painted on request.

Rung distance: c-c 250 mm.
Ultimate load: ≥ 1.7 times maximum load.

MP cable ladders and suspension systems are seismologically tested as per the Swedish nuclear industry document TBE 1022.

B	3 m length Zinc 20 µm	E-no	6 m length Zinc 20 µm	E-no
200	MP-102 S	11 150 23	MP-102 S6	——
300	MP-103 S	11 150 26	MP-103 S6	——
400	MP-104 S	11 150 29	MP-104 S6	——
500	MP-105 S	11 150 32	MP-105 S6	——
600	MP-106 S	11 150 35	MP-106 S6	——

Bending flexure in mm for bracket distance 2 to 3 m.

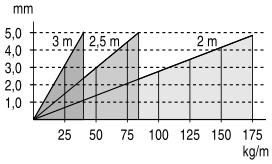

Cable ladder 6 m type MP-TS

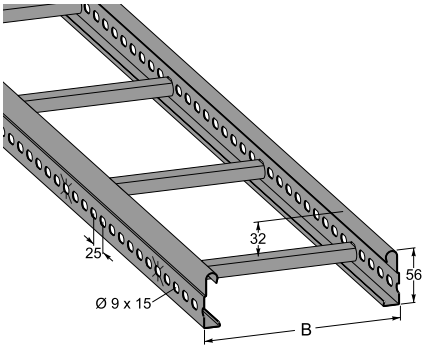

Fulfils the requirements of EL AMA for heavy cable ladders. For choice of surface treatment, see page 4. Can be painted on request.
Cable ladder equipped with closed rungs.

Ladder length: 6 m
Rung distance: c-c 250 mm.
Ultimate load: ≥ 1.7 times maximum load.

MP cable ladders and suspension systems are seismologically tested as per the Swedish nuclear industry document TBE 1022.

B	Zinc 20 µm	E-no	Z-EDP	E-no
200	MP-152 S	11 150 43	MP-152 Y	11 150 64
300	MP-153 S	11 150 46	MP-153 Y	11 150 67
400	MP-154 S	11 150 49	MP-154 Y	11 150 70
500	MP-155 S	11 150 52	MP-155 Y	11 150 73
600	MP-156 S	11 150 55	MP-156 Y	11 150 76

Bending flexure in mm for bracket distance 2 to 3 m.

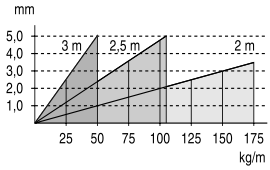

As regards the MP number, the letters stands for: (see page 4)

E	= Elzinc	10 µm	**Z**	= Zinc	SS-EN ISO 1461
S	= Zinc	20 µm	**AZ**	= Aluzinc	25 µm (AZ 185)
A	= Aluzinc	20 µm			

Cable ladder 6 m MP-Z, PZ, AZ

Fulfils the requirements of EL AMA for heavy cable ladders. MP-Z, and AZ is equipped with closed rungs. MP-PZ has perforated rungs; rungs 2 and 4 at each end are closed. For choice of surface treatment, see page 4.

Ladder length: 6m
Rung distance: c-c 250mm.
Ultimate load: ≥1.7 times maximum load

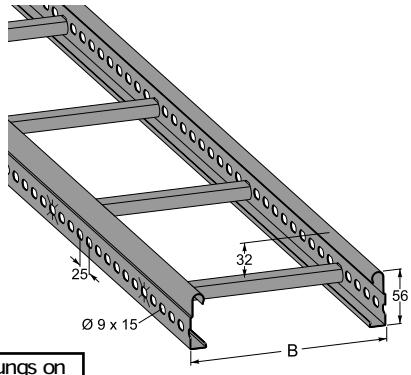

Bending flexure in mm for bracket distance 2 to 3m.

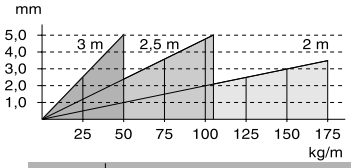

Perforated rungs on request for model AZ.

B	Zinc 60 µm	E-no	Zinc 60 µm	E-no	AZ 185	E-no
200	MP-152 Z	11 150 63	MP-152 PZ	11 150 77	MP-152 AZ	11 150 62
300	MP-153 Z	11 150 66	MP-153 PZ	11 150 78	MP-153 AZ	11 150 65
400	MP-154 Z	11 150 69	MP-154 PZ	11 150 79	MP-154 AZ	11 150 68
500	MP-155 Z	11 150 72	MP-155 PZ	11 150 80	MP-155 AZ	11 150 71
600	MP-156 Z	11 150 75	MP-156 PZ	11 150 81	MP-156 AZ	11 150 74

Cable ladder 6 m MP-FZ

Intended for long bracket distances, but also in environments with major requirements for mechanical strength. Fulfils the requirements of EL AMA for heavy-duty cable ladders. For choice of surface treatment, see page 4. Can be painted on request.

Ladder length: 6m
Rung distance: c-c 300mm.
Ultimate load: ≥1.7 times maximum load.

MP cable ladders and suspension systems are seismologically tested as per the Swedish nuclear industry document TBE 102.2.

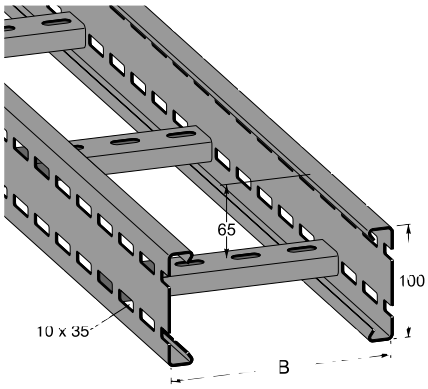

Bending flexure in mm for bracket distance 4 to 6m.

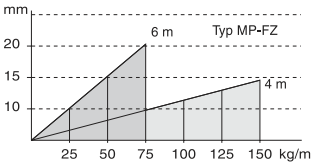

B	Zinc 60 µm	E-no	Z-EDP	E-no
200	MP-192 Z	11 150 85	MP-192 Y	11 150 86
300	MP-193 Z	11 150 88	MP-193 Y	11 150 89
400	MP-194 Z	11 150 91	MP-194 Y	11 150 92
500	MP-195 Z	11 150 94	MP-195 Y	11 150 95
600	MP-196 Z	11 150 97	MP-196 Y	11 150 98

As regards the MP number, the letters stands for: (see page 4)
V = White NCS 0502-Y GI 50
B = Beige NCS 2502-Y
R = acid-proof
Y = Z-EDP (see page 7)

MP-Cable ladders

Joint for MP-S, TS, Z, PZ, AZ

Fulfils the requirements for potential balancing as per SS-EN 61537:2001.

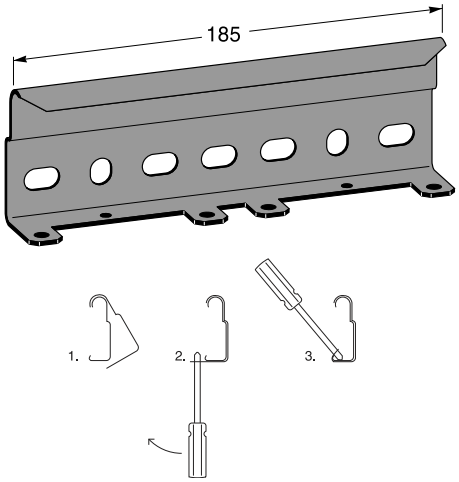

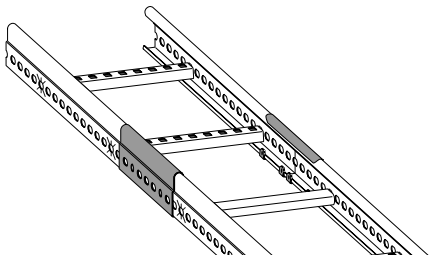

Zinc 20µm	E-no	Zinc 60µm	E-no	AZ 185	E-no	Z-EDP	E-no
MP-107 S	11 153 63	MP-107 Z	11 153 65	MP-107 AZ	11 153 62	MP-107 Y	11 153 66

Universal link for MP-S, TS, Z, PZ, AZ

Fulfils the requirements for potential balancing as per SS-EN 61537:2001.

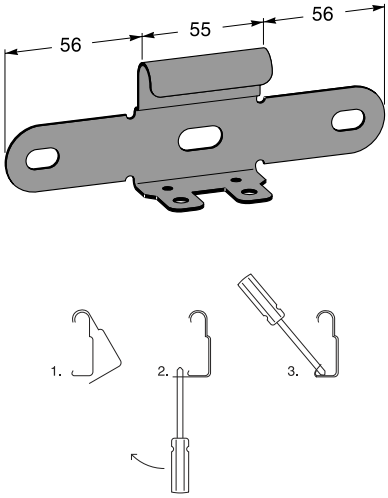

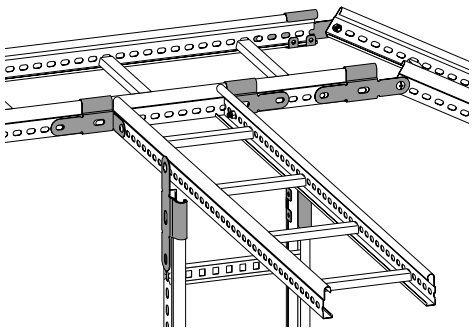

Zinc 20µm	E-no	Zinc 60µm	E-no	AZ 185	E-no	Z-EDP	E-no
MP-114 S	11 153 74	MP-114 Z	11 153 76	MP-114 AZ	11 153 72	MP-114 Y	11 153 75

As regards the MP number, the letters stands for: (see page 4)

E = Elzinc 10 µm
S = Zinc 20 µm
A = Aluzinc 20 µm
Z = Zinc SS-EN ISO1461
AZ = Aluzinc 25 µm (AZ 185)

Joint for MP-FZ

Fulfils the requirements for potential balancing as per SS-EN 61537:2001.

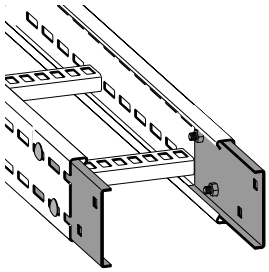

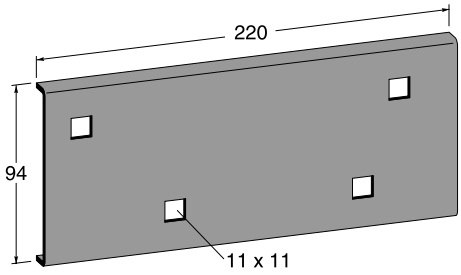

Zinc 60 µm	E-no	Z-EDP	E-no
MP-201 Z	11 153 67	MP-201 Y	11 153 68

Vertical hinge for MP-FZ

Fulfils the requirements for potential balancing as per SS-EN 61537:2001.

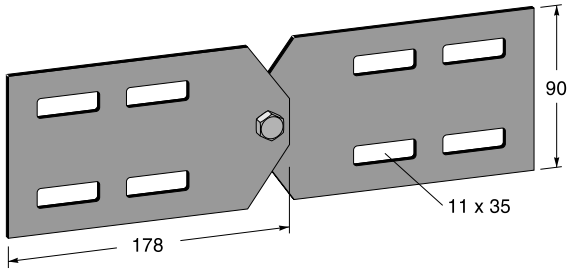

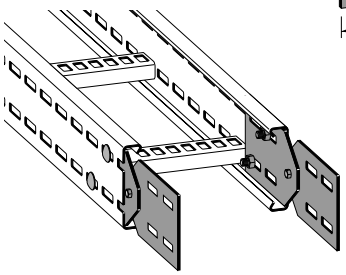

Zinc 60 µm	E-no	Z-EDP	E-no
MP-202 Z	11 153 77	MP-202 Y	11 153 73

As regards the MP number, the letters stands for: **V** = White **B** = Beige NCS 0502-Y GI 50 NCS 2502-Y **R** = acid-proof **Y** = Z-EDP (see page 4) (see page 7)